NTAG213 Dia25mm Wet Inlay

湿Inlay尺寸 Wet inlay Size

Dia 25mm

天线尺寸/材质 Antenna Size / Material

Dia 21mm

PET

天线型号/厚度 Antenna Model / Thickness

#034

0.07-/+0.03mm

芯片 Chip

NTAG213

频段/协议 Resonance Frequency/ Protocol

13.8-14.5Mhz

ISO14443A

内存 Memory

Memory	UID：7 byte UID
	User memory：144 Byte
	Origination：32 bit

芯片使用寿命 IC Life

10万次擦写,数据保存10年

100,000 Programming cycles, 10years data retention

读距/读写器 Reading Distance/Reference Reader

3-5cm

ACS ACR122U-A9

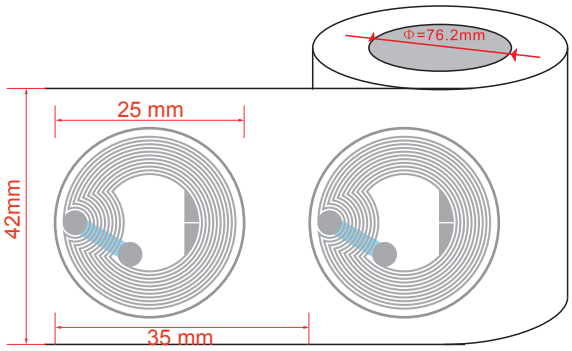

实物图（Product Image）

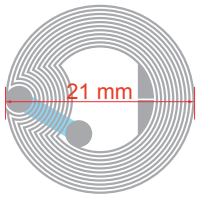

天线图（Antenna）

结构图（Structure）

用途 Application

地铁车票 / 公交电子门票 / 物流 / 图书馆/ 等等

Subway tickets/ Bus RFID ticket/ Logistics/ Library

声 明： 以上环境要求的建议基于我司最新的知识和现有经验基础上，本公司保留产品最终解释权。本文件权属我司，未经我司许可，不得复制,转寄等一切侵权活动。

Disclaimer: Our recommendations are based on our latest knowledge and experience, we reserve all rights for final explanation. The information contained on this document is considered to be confidential material proprietary to us. and this information shall not be disclosed, duplicated or copied for any purpose. nor made available for any third party without the prior consent to our company.

NTAG213 Dia25mm Wet Inlay

特殊工艺 Features/Option

铝蚀刻

Aluminium Etched Antenna

包装 Packing

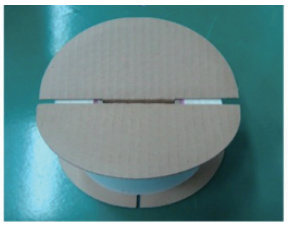

塑封、防潮包装、中性标签 Plastic Water-proof Neutral packing	数量/卷状 Qty/Roll	数量/箱 Qty / carton	箱子尺寸 Dimension
	2000 pcs	4000 pcs	22x22x15CM
		8000pcs	44x44x14CM

操作/储存 温度 Temperature / Humidity

操作温度（Operating Temperature/Humidity):[-15° C to +70° C] 20% to 90% RH Non-condensing;
适用温度（Storage Temperature/Humidity):[-25° C to +50° C] 20% to 90% RH Non-condensing;

保质期 Shelf Life

使用防静电袋密封包装、在+23° C±5° C / 50%±10%RH条件下2年。

From the date of manufacture, 2 year in vacuumed bag at +23°C±5°C / 50%±10%RH)。

声 明： 以上环境要求的建议基于我司最新的知识和现有经验基础上，本公司保留产品最终解释权。本文件权属深圳阿弗艾德电子有限公司，未经我司许可, 不得复制,转寄等一切侵权活动。

Disclaimer: Our recommendations are based on our latest knowledge and experience, we reserve all rights for final explanation. The information contained on this document is considered to be confidential material proprietary to us. and this information shall not be disclosed, duplicated or copied for any purpose. nor made available for any third party without the prior consent to our company.